CE

Declaration of Conformity

The following

EQUIPMENT	5" x 4" USB Graphics Tablet
TYPE	Digitizing Tablet
Serial Number	n/a

is herewith confirmed to comply with the requirements set out in the Council Directive on the Approximation of the Laws of the Member States relating to Electromagnetic Compatibility (89/336/EEC) and the amendments in the Council Directive 91/263/EEC, 92/31/EEC, 93/68/EEC.

For the evaluation of above mentioned Directives,
the following standards were applied:

EN 55022:1994 class B A1: 1995-12, A2: 1997-08
EN 50082-1:1992
(IEC 801-2:1991 / IEC 801-3:1984 / IEC 801-4:1988)

The following manufacturer is responsible for this declaration:

ACE CAD ENTERPRISE CO., LTD.
2F No. 94, Bao Chung Rd., Hsin Tien City,
Taipei Hsien
Taiwan R.O.C.

Taipei, March 20, 2000

Signature of responsible Person

CERTIFICATE

IN COMPLIANCE WITH THE REQUIREMENTS OF THE:

EMC Directive of EU (89/336/EEC)

APPLICANT:

ACE CAD ENTERPRISE CO., LTD.

MODEL / TYPE:

5" x 4" USB Graphics Tablet / Digitizing Tablet

MANUFACTURER:

ACE CAD ENTERPRISE CO., LTD.

CERTIFICATE NO:

360 168

KEEPS ALL REQUIRMENTS ACCORDING FOLLOWING REGULATIONS:

EN 55 022: 1994 class B / A1: 1995 / A2: 1997

EN 50 082-1 : 1992

(IEC 801-2:1991, IEC 801-3:1984, IEC 801-4:1988)

Straubing,

March 20, 2000

TEST ENGINEER:

Steven Wang

EMV TESTHAUS

TESTREPORT

ELECTROMAGNETIC COMPATIBILITY

☑	**Test Report**	No. 360 168
☐	**Completion to**	No.
☐	**Modification to**	No.

Order Number:	*360 168*
Applicant:	*ACE CAD ENTERPRISE CO., LTD*
Manufacturer:	*ACE CAD ENTERPRISE CO., LTD*
Kind of Product:	*Digitizing Tablet*
Model Name:	*5" x 4" USB Graphics Tablet*
Serial Number:	*n/a*

The test result refers exclusively
to the test presented test model.

Without written authorization of the test lab
the test report must not be copied.

Deutscher
Akkreditierungs
Rat

DAR

Registriernummer: TTI-P-G 101/95-00

EMC TESTREPORT

Prepared for:

ACE CAD ENTERPRISE CO., LTD.
2F, No. 94, Bao Chung Rd., Hsin Tien City,
Taipei Hsien,

Taiwan R.O.C.

Prepared by:

EMV TESTHAUS GmbH

Gustav Hertz Straße 35
94315 Straubing

GERMANY

test engineer: *Steven Wang*
checked by: *Franz Maerkl*

Table of Contents

Sec.	Page	Description
		Index
1.0	4	Test Regulations
1.1	4	Test Regulations Emission
1.2	5	Test Regulations Susceptibility
2.0	6	General Information
2.1	7	Photo Documentation of EUT
3.0	8	Test Requirements
4.0	9	Test Conditions Conducted Emission Test (150kHz - 30 MHz)
5.0	14	Test Conditions: Radiated Emission Test (30MHz – 1000MHz)
6.0	19	Test Conditions: Electrostatic Discharge Immunity Test (ESD)
7.0	23	Test Conditions: Radio Frequency Electromagnetic Field Immunity Test (RFT)
8.0	27	Test Conditions: Burst Immunity Test (EFT)
9.0	31	Summary

1.0 Test Regulations
1.1 Emission

	European Standards	International Standards
☑	EN 55 022:1994 class B A1:1995-12, A2:1997-08	CISPR 22:1993

Deviation of Regulations and Standards: ☑ no ☐ page:

1.2 Test Regulations Susceptibility:

	European Standards	International Standards
☑	EN 50 082-1:1992	
☑	EN 60801-2: 1993	IEC 801-2:1991
☑		IEC 801-3:1984
☑		IEC 801-4:1988

Deviation of Regulations and Standards: ☑ no ☐ page:

2.0 General Information

Equipment under Test:

Date of receipt:	*March, 3th 2000*
Model Name:	*ACE CAD 5" x 4" USB Graphics Tablet*
Product Name:	*Digitizing Tablet*
Serial Number:	*n/a*

Test Configuration:

	Model	**serial number**
1	*5" x 4" USB Graphics Tablet*	*n/a*
1	*EMV Testhaus PC Macom PII 266MHz*	*n/a*
1	*17" Belinea Monitor*	*n/a*
1	*Cherry Keyboard*	*n/a*
1	*PS/2 Logitec Mouse*	*n/a*

2.1 Photo of EUT

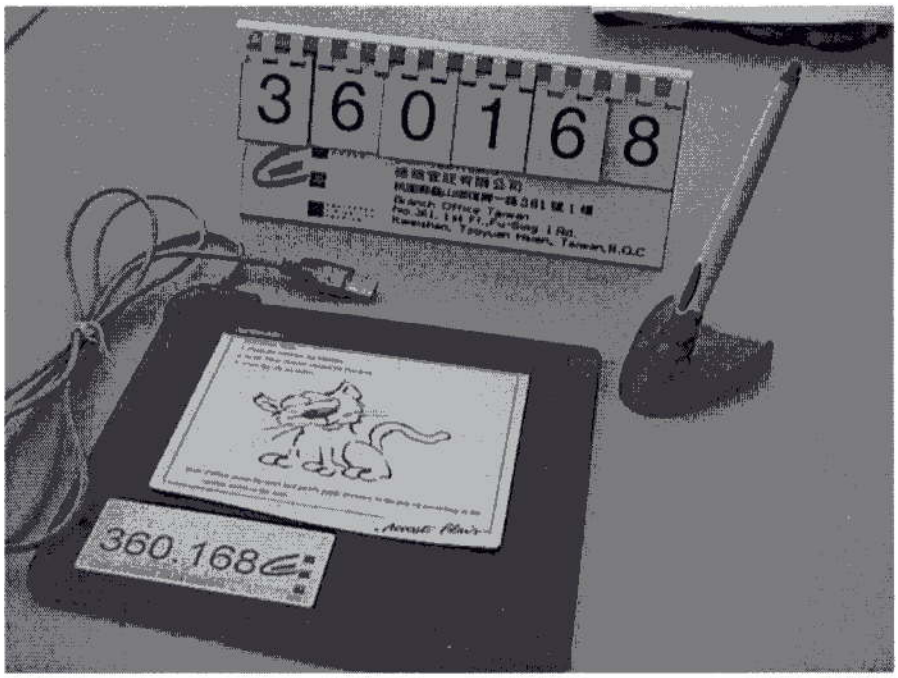

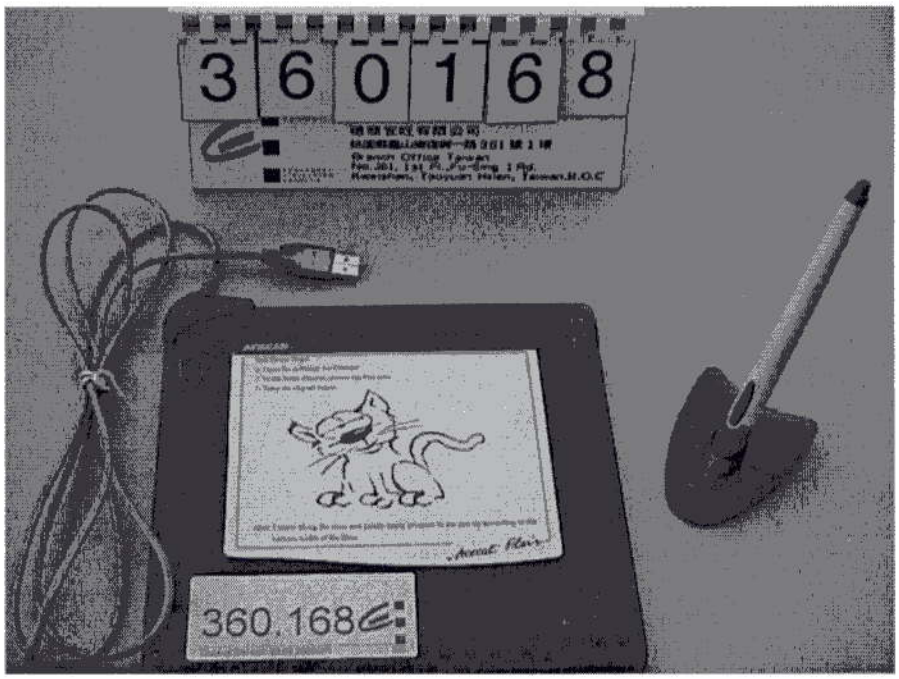

3.0 Test Requirements

Operation Mode:

Judgement of operation for EMC Test

run Ace Cad software on the TEST PC
(green LED on)

Susceptibility Requirements:

No interrupt or malfunction of the demo mode

4.0 Test Conditions

Conducted Emission Test
Frequency range: 150 kHz - 30 MHz

The measurements of the conducted emission was carried out in a

☐	Compact Diagnostic Chamber	Type:	Siemens - Matsushita
		Size:	7.300 x 3.400 x 3.300 (L x B x W)
		Inventory No.:	200017
☑	Shielded Room	Type:	Siemens - Matsushita
		Size:	4.600 x 2.800 x 2.550 (L x B x W)
		Inventory No.:	200018

MEASURING INSTRUMENTS:

☑	ESH 3	Rohde & Schwarz	Inventory No.:	100002
☐	SMV 11	MEB	Inventory No.:	200001
☐			Inventory No.:	

TEST-ACCESSORIES:

☑	NNB-11	MEB	Inventory No:	100008
☑	NNB 18	MEB	Inventory No.:	100007
☐	EZ - 10	Rohde & Schwarz	Inventory No.:	100006
☐	TK 11	MEB	Inventory No.:	200010
☐	ESH 2-Z5	Rohde & Schwarz	Inventory No.:	200060

All used test instruments as well as the test accessories are calibrated regularly.

4.1 Test Result

Conducted Emission Test
Frequency range: 150 kHz - 30 MHz

The requirements according to the marked specifications on page 4 are

☑ **KEPT**

Min: limit margin **9,87** **dB** at **0,275** **MHz**

☐ **NOT KEPT**

Max: limit margin _____ **dB** at _____ **MHz**

Comment:

Interference-Voltage Test

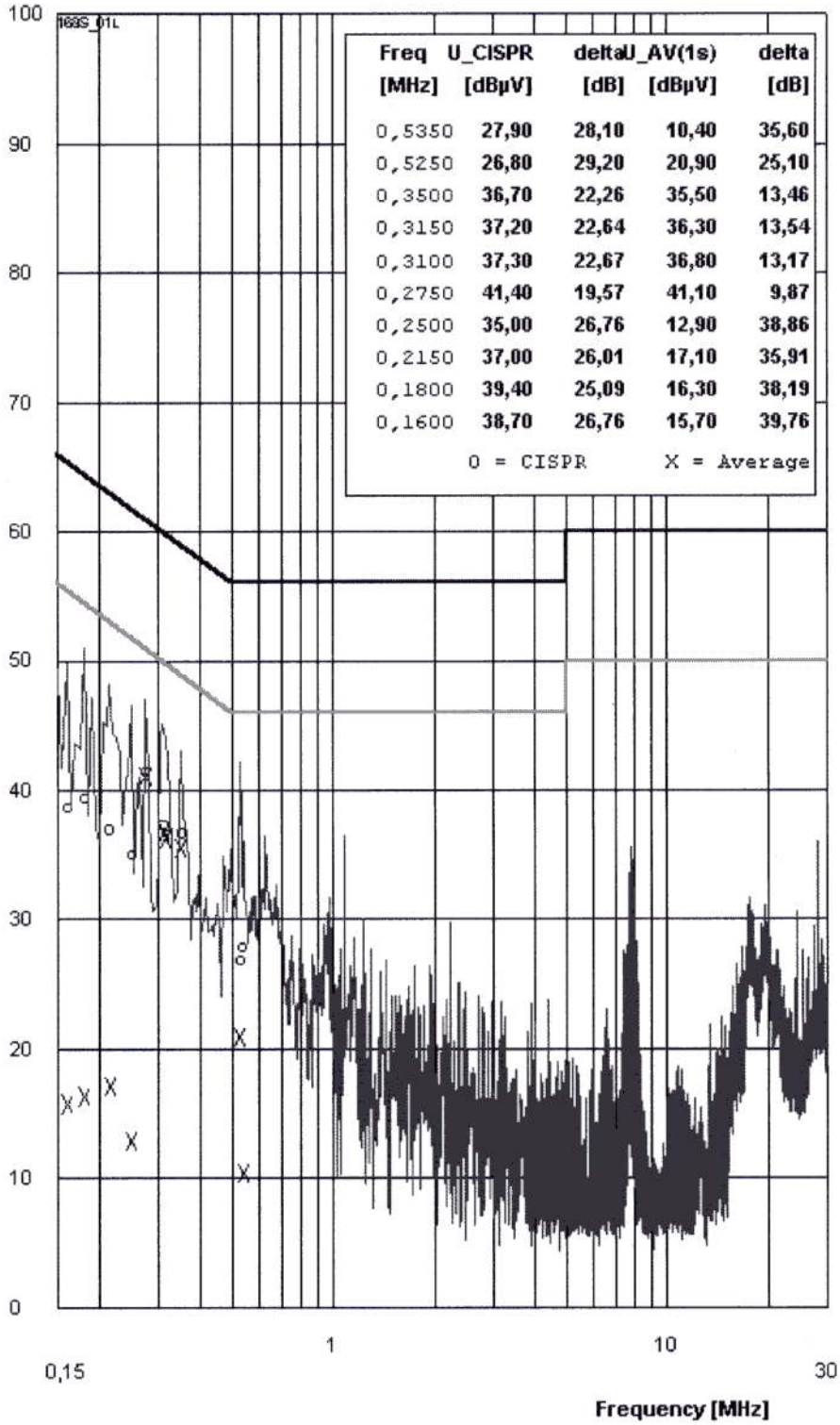

Freq [MHz]	U_CISPR [dBµV]	delta [dB]	U_AV(1s) [dBµV]	delta [dB]
0,5350	27,90	28,10	10,40	35,60
0,5250	26,80	29,20	20,90	25,10
0,3500	36,70	22,26	35,50	13,46
0,3150	37,20	22,64	36,30	13,54
0,3100	37,30	22,67	36,80	13,17
0,2750	41,40	19,57	41,10	9,87
0,2500	35,00	26,76	12,90	38,86
0,2150	37,00	26,01	17,10	35,91
0,1800	39,40	25,09	16,30	38,19
0,1600	38,70	26,76	15,70	39,76

O = CISPR X = Average

REGULATIONS:
EN 55022 class B

PEAK / CISPR / AVERAGE

TEST EQUIPMENT:
R&S ESH3 (10002)

MEB NNB 11 (100008)

ORDER NO.:
360168

168S_01L

EUT:
ACECAD ENTERPRISE CO., LTD.

Digitizing Tablet

5" x 4" USB Graphics tablet

N/A

OPERATION MODE:
Windows 98: ACE CAD software

1024x768/60Hz/48kHz

17" Monitor, ser/par printer

1 x USB mouse

PS/2 keyboard

headset,

Macom PII 266MHz

TEST FACILITY:
EMV TESTHAUS (Taiwan)

DATE / TIME:
10.03.2000 15:03

TEST ENGINEER:
Janker M.

Interference-Voltage Test

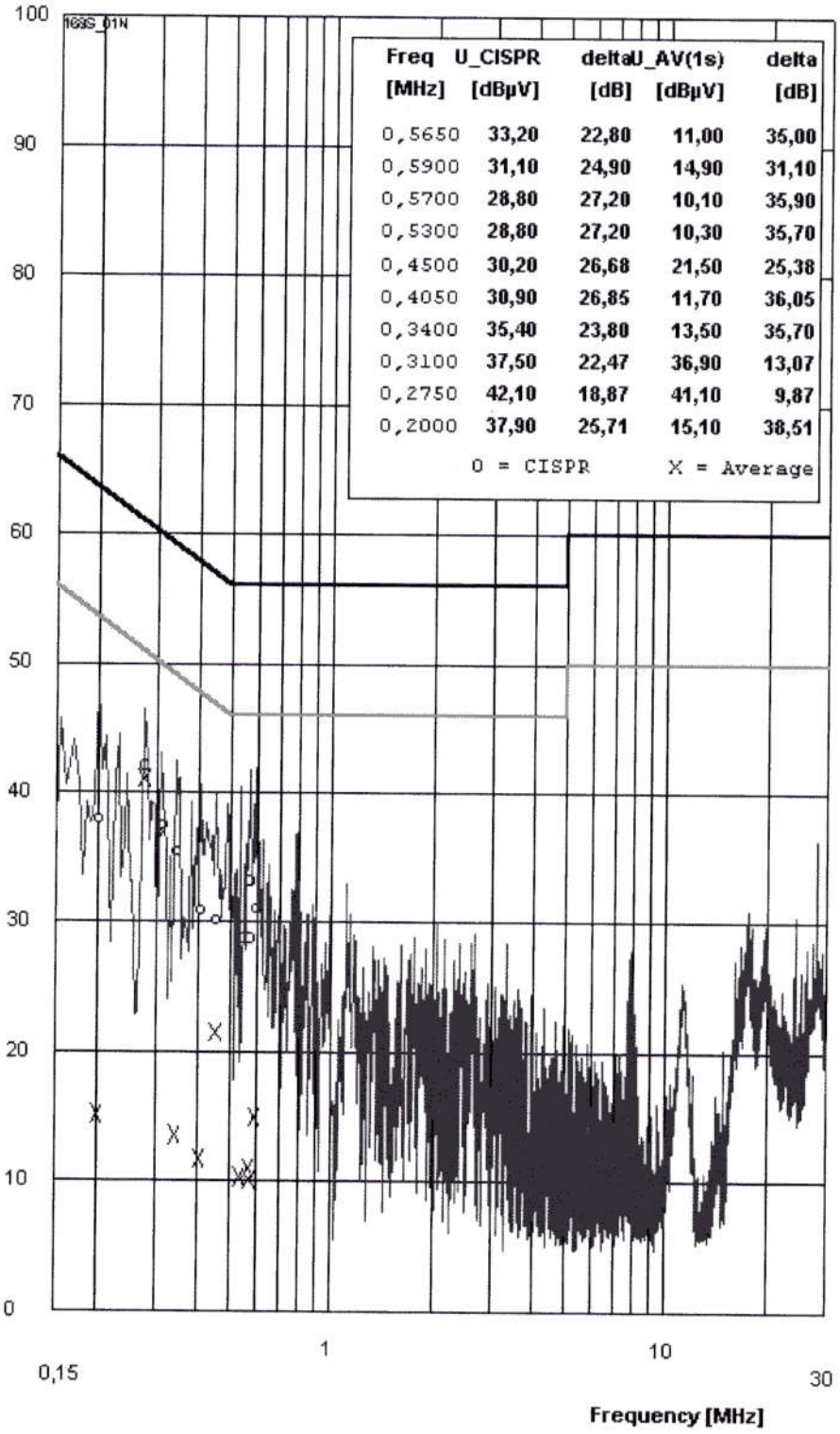

Freq [MHz]	U_CISPR [dBµV]	delta [dB]	U_AV(1s) [dBµV]	delta [dB]
0,5650	33,20	22,80	11,00	35,00
0,5900	31,10	24,90	14,90	31,10
0,5700	28,80	27,20	10,10	35,90
0,5300	28,80	27,20	10,30	35,70
0,4500	30,20	26,68	21,50	25,38
0,4050	30,90	26,85	11,70	36,05
0,3400	35,40	23,80	13,50	35,70
0,3100	37,50	22,47	36,90	13,07
0,2750	42,10	18,87	41,10	9,87
0,2000	37,90	25,71	15,10	38,51

O = CISPR X = Average

REGULATIONS:
EN 55022 class B

PEAK / CISPR / AVERAGE

TEST EQUIPMENT:
R&S ESH3 (10002)

MEB NNB 11 (100008)

ORDER NO.:
360168

168S_01N

EUT:
ACECAD ENTERPRISE CO., LTD.

Digitizing Tablet

5" x 4" USB Graphics tablet

N/A

OPERATION MODE:
Windows 98: ACE CAD software

1024x768/60Hz/48kHz

17" Monitor, ser/par printer

1 x USB mouse

PS/2 keyboard

Headset

Macom PII 266MHz

TEST FACILITY:
EMV TESTHAUS (Taiwan)

DATE / TIME:
10.03.2000 15:03

TEST ENGINEER:
Janker M.

4.2 Test Setup

Conducted Emission Test
Frequency range: 150 kHz - 30 MHz

Measuring unit is cm

1 Metal wall, min. 2m x 2m
2 EUT
3 Meander-like folded wires
4 Artificial network
5 Shielded connection lines
6 Receiver
B Terminal: Reference ground
M Terminal: Receiver
P Terminal: EUT

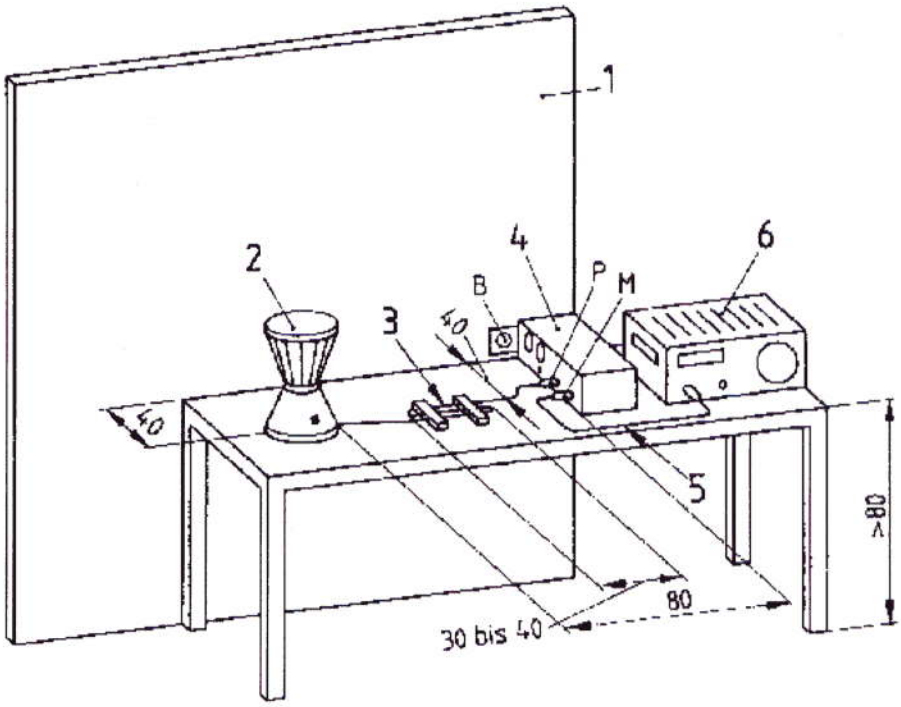

5.0 Test Conditions

Radiated Emission Test
Frequency range: 30 MHz - 1000 MHz

The radiated emission in the frequency range of 30 MHz - 1000 MHz was tested in a horizontal and vertical polarization at a non reflecting open site in a

Test Distance:

- ☐ 3 Meter
- ☑ 10 Meter
- ☐ 30 Meter

MEASURING TESTINSTRUMENTS:

☑	ESVP	Rohde & Schwarz	Inventory No.:	100001
☐	ESPC	Rohde & Schwarz	Inventory No.:	100052

TEST - ACCESSORIES:

☐	VULP 9165	Schwarzbeck	Inventory No.:	100055
☑	VULB 9160	Schwarzbeck	Inventory No.:	100056
☐	BBA 9106	Schwarzbeck	Inventory No.:	100011
☐	VHA 9103	Schwarzbeck	Inventory No.:	100012
☐	VHA 9105	Schwarzbeck	Inventory No.:	100013
☐	UHALP 9107	Schwarzbeck	Inventory No.:	100027

All used test instruments as well as the test accessories are calibrated regularly

5.1 Test Results

Radiated Emission Test
Frequency range: 30 MHz - 1000 MHz

The requirements according to the marked specifications on page 4 are

☑ **KEPT**

Min: limit margin **7,1** **dB** at **801,87** **MHz**

☐ **NOT KEPT**

Max: limit margin _____ **dB** at _____ **MHz**

Comment:

Interference-Radiation Test

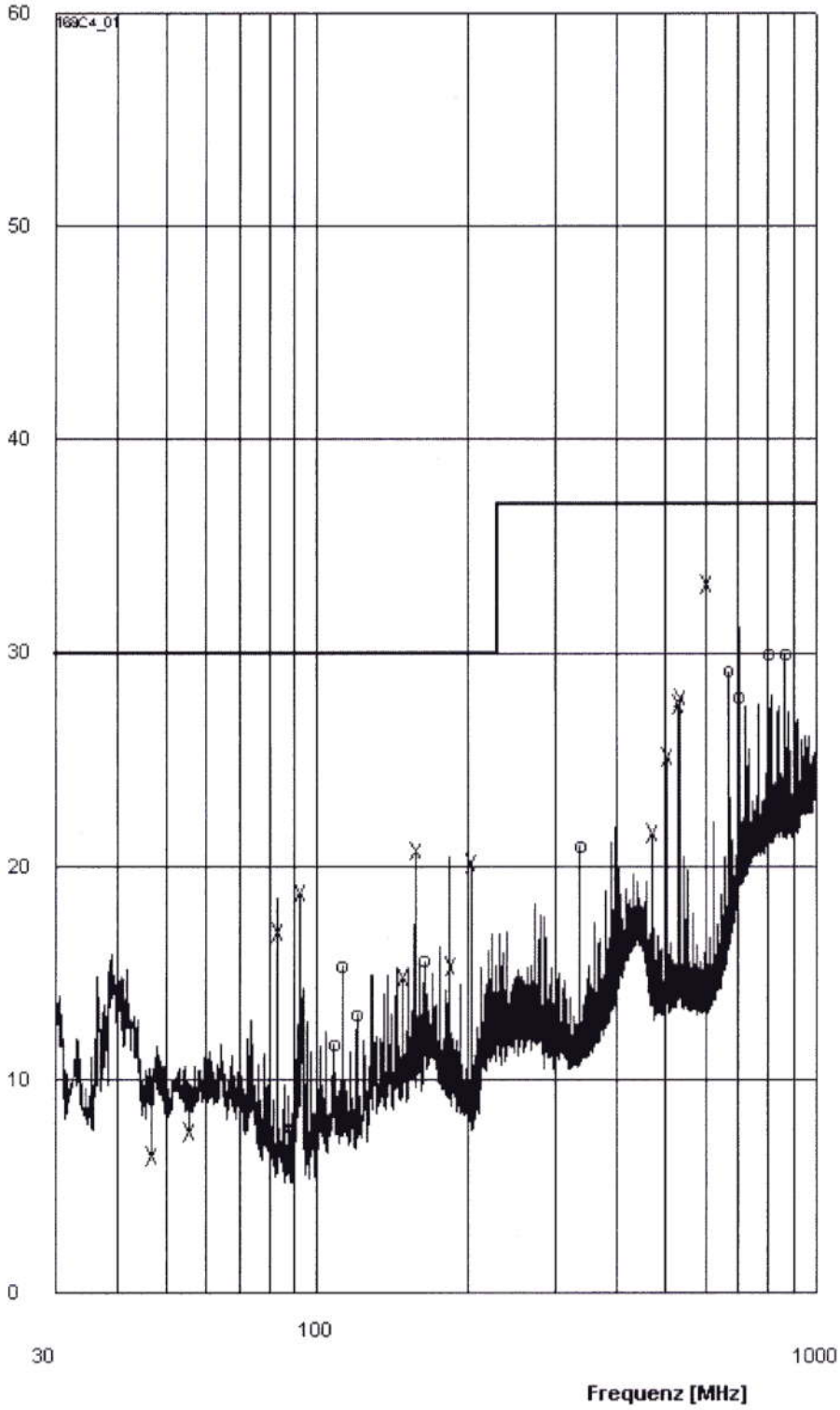

REGULATIONS:

EN 55022 class B

x-vertical, o-horizontal

TEST EQUIPMENT:

ESVP 861190/024

VULB 9160

ORDER NO.:

360168

168C4_01

EUT:

ACECAD ENTERPRISE CO., LTD.

Digitizing Tablet

5" x 4" USB Graphics tablet

Flair

REMARKS:

Windows 98

1024x768/60Hz/48kHz

17" Monitor, ser/par printer

1xUSB mouse,

PS/2 keyboard,

headset,

Macom PII 266MHz

TEST FACILITY:

EMV TESTHAUS (Taiwan)

DATE / TIME:

15.02.2000

TEST ENGINEER:

Tsai

Interference-Radiation-Test

File: 168C4_01

F [MHz]	U_Rec [dBµV/m]	Limit [dBµV/m]	Corr. [dB].	U_Ant [dBµV]	dU [dBµV/m]	Turn-table	Ant.	Pol.	Remark
46,70	6,4	30,0	6,5	-0,1	23,60	161°	199cm	V	12.6 |
55,30	7,5	30,0	8,6	-1,1	22,50	17°	199cm	V	13.8 |
82,95	16,9	30,0	5,1	11,8	13,10	113°	199cm	V	21.9 |
87,59	7,7	30,0	4,8	2,9	22,30	84°	199cm	V	15.8 |
92,17	18,7	30,0	4,8	13,9	11,30	91°	199cm	V	24.1 |
107,99	11,6	30,0	6,1	5,5	18,40	65°	199cm	H	12.9 |
111,99	15,3	30,0	5,5	9,8	14,70	180°	199cm	H	15.7 |
119,99	13,0	30,0	5,7	7,3	17,00	41°	199cm	H	15.1 |
147,47	14,8	30,0	8,5	6,3	15,20	83°	199cm	V	19.6 |
156,69	20,7	30,0	9,0	11,7	9,30	143°	199cm	V	21.5 |
163,99	15,5	30,0	8,9	6,6	14,50	326°	199cm	H	16.9 |
184,34	15,3	30,0	10,0	5,3	14,70	28°	199cm	V	20.5 |
202,77	20,1	30,0	8,7	11,4	9,90	-1°	199cm	V	20.8 |
336,08	20,9	37,0	10,7	10,2	16,10	360°	199cm	H	22.0 |
467,76	21,5	37,0	13,2	8,3	15,50	6°	199cm	V	23.4 |
501,17	25,1	37,0	13,6	11,5	11,90	69°	199cm	V	24.9 |
528,12	27,6	37,0	13,7	13,9	9,40	46°	199cm	V	27.4 |
534,58	27,9	37,0	13,7	14,2	9,10	77°	199cm	V	28.8 |
601,41	33,2	37,0	13,4	19,8	3,80	131°	199cm	V	III 28.9 |
668,23	29,1	37,0	16,2	12,9	7,90	360°	199cm	H	29.7 |
701,65	27,9	37,0	15,3	12,6	9,10	360°	199cm	H	30.8 |
801,87	29,9	37,0	17,0	12,9	7,10	11°	199cm	H	29.8 |
868,70	29,9	37,0	19,4	10,5	7,10	0°	199cm	H	31.7 |

5.2 Test Setup

Radiated Emission Test

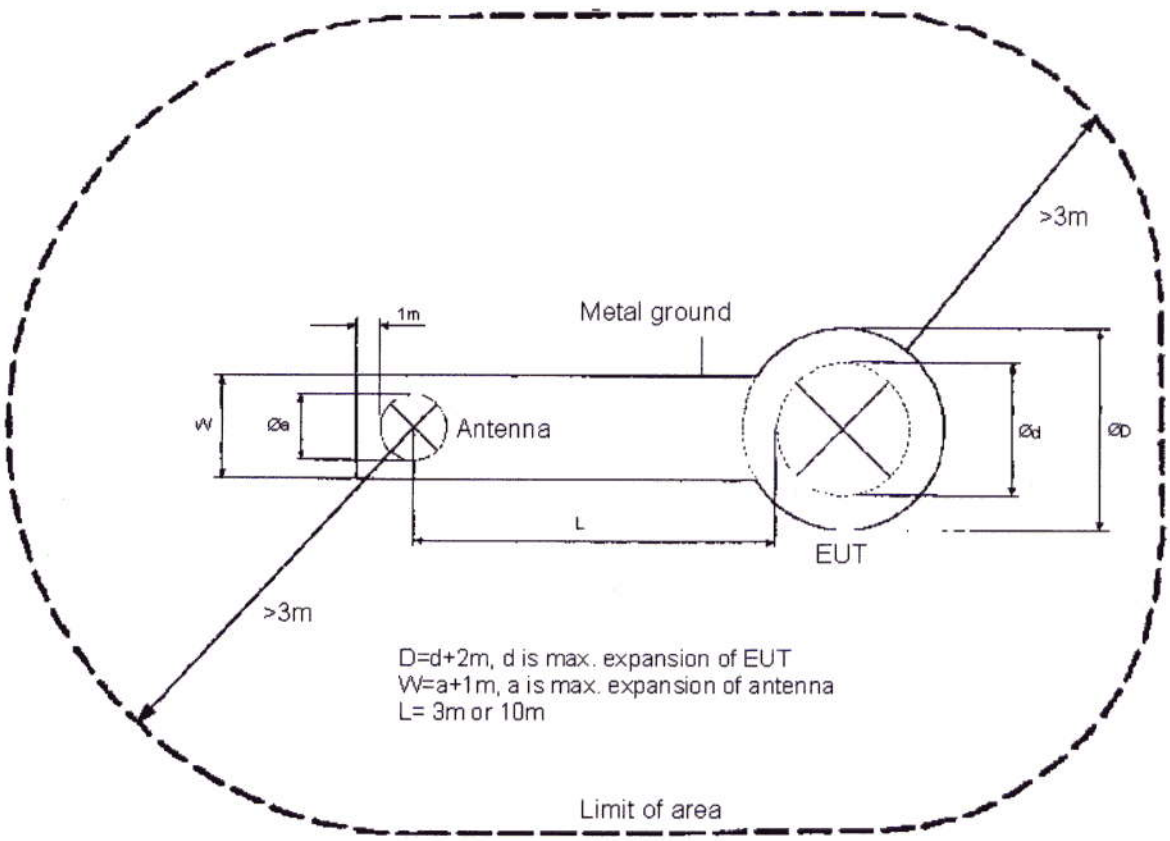

6.0 Test Conditions

Electrostatic Discharges Immunity Test (ESD)

The measurements of the electrostatic discharge was carried out in a

☐	Compact Diagnostic Chamber	Type:	Siemens - Matsushita
		Size:	7.300 x 3.400 x 3.300 (L x B x W)
		Inventory No.:	200017
☑	Shielded Room	Type:	Siemens - Matsushita
		Size:	4.600 x 2.800 x 2.550 (L x B x W)
		Inventory No.:	200018

MEASURING INSTRUMENTS:

☑	Tester 1000	EMC-Partner	Inventory No.:	100028
☐	NSG 433	Schaffner	Inventory No.:	100004

TEST-ACCESSORIES:

☐	CDA 402	Schaffner	Inventory No.:	100004
☑	VCP	EMV Testhaus	Inventory No.:	300037
☑	HCP	EMV Testhaus	Inventory No.:	300038

All used test instruments as well as the test accessories are calibrated regularly.

Requirements:	Test Regulation Basic Standard IEC 801-2:1991 Electrostatic discharge immunity Test Test Configuration according IEC 801-2:1991
Direct application of discharge:	discharge is done at points which are accessible during normal use.

Test Voltages direct:		Test Voltages indirect:	
	☑ 2 kV		☑ 2 kV
	☑ 4 kV		☑ 4 kV
	☑ 8 kV		☐ 8 kV
	☐ 15 kV		☐ 15 kV

Method of discharges:	☑ air discharge ☑ contact discharge (relay) ☑ contact discharge Indirect (HCP, VCP)
Polarity:	☑ positive ☑ negative
ESD-gun specifications:	charging resistor (R_{ch}) 100 MΩ 5 % discharging resistor (R_d) 330 Ω ± 5 % energy-storage-capacitor (C_s) 150 pF ± 5 % time of discharge: ≥ 1 sec. rate of single discharges:≥ 10 / discharge point
Environment:	Temperature: 19 °C Humidity: 56 % Barometric pressure: 990 hPa

6.1 Test Result

Electrostatic Discharge Immunity Test (ESD)

The requirements according to the marked specifications on page 5 are

☑ **KEPT**

☐ **NOT KEPT**

Operating conditions during the test:

☑ Normal performance within the specification limits.

☐ Temporary degradation or loss of function or performance which is self recoverable.

☐ Temporary degradation or loss of function or performance which requires operator intervention or system reset.

☐ Degradation or loss of function which is not recoverable due to damage equipment (components) or software, or loss of data.

Comments:

The correct function of the EUT was checked during and after the test.

6.2 Test Setup

Electrostatic Discharge Immunity Test (ESD)

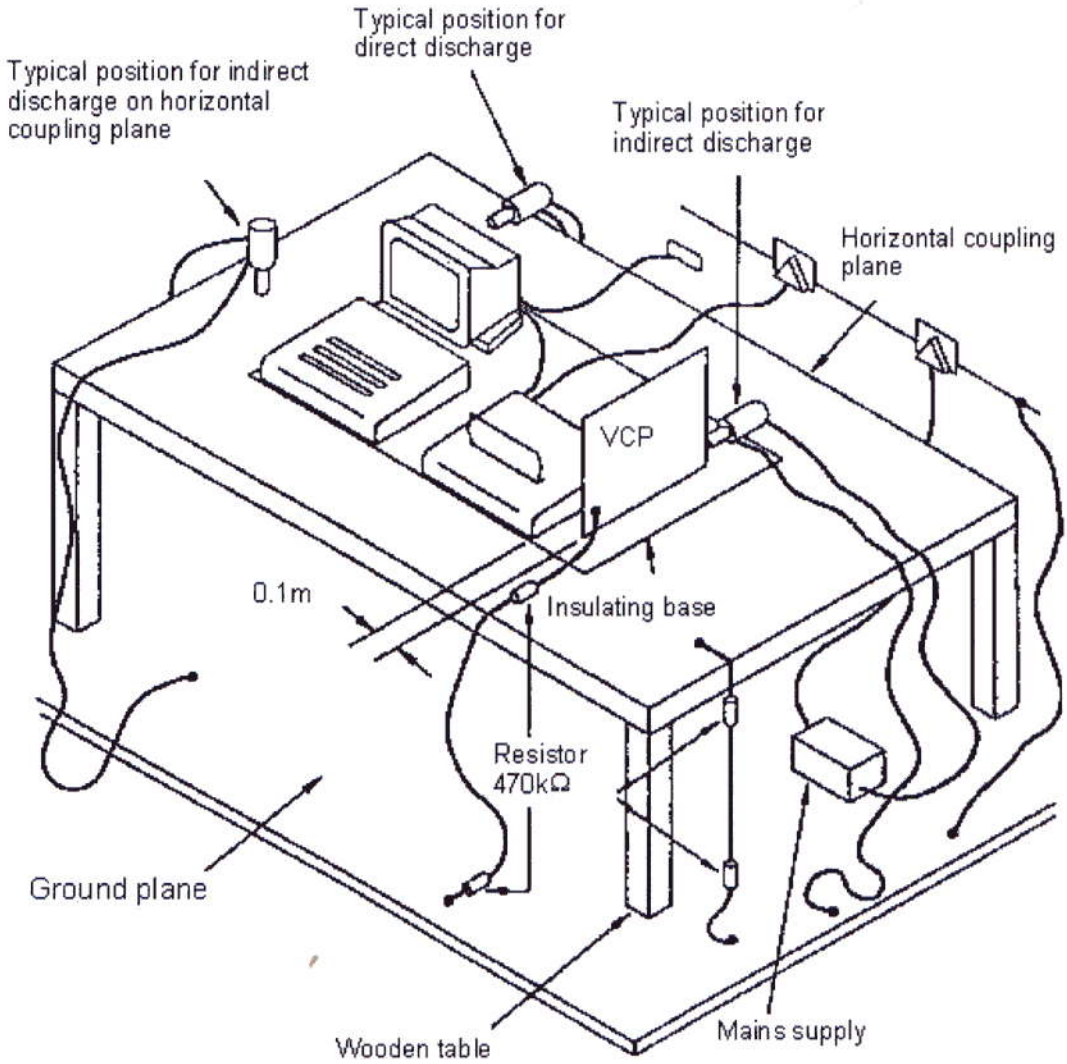

7.0 Test Conditions

Radio Frequency Electromagnetic Field Immunity Test

The measurements of the radiated electromagnetic fields was carried out in a

☑	Compact Diagnostic Chamber	Type:	Siemens - Matsushita
		Size:	7.300 x 3.400 x 3.300 (L x B x W)
		Inventory No.:	200017
☐	Shielded Room	Type:	Siemens - Matsushita
		Size:	4.600 x 2.800 x 2.550 (L x B x W)
		Inventory No.:	200018

MEASURING INSTRUMENTS

☑	Signal Generator 2024 0,009 – 24000 MHz	Marconi	Inventory No.:	100051
☑	Wideband HF-Amplifier 757LC 0,01 - 1000 MHz	Kalmus	Inventory No.:	100053
☑	Antenna HL 023 A1	R & S	Inventory No.:	100015
☑	Power Monitoring System PMS 100 kHz – 1000 MHz	Frankonia	Inventory No.:	100072
☑	Directional Coupler DC3001 100 kHz – 1000 MHz	ARS	Inventory No.:	100073

All used test instruments as well as the test accessories are calibrated regularly.

Requirements:	Test Regulation Basic Standard: IEC 801-3:1984 Radiated, radio frequency electromagnetic field immunity test. Test configuration according IEC 801-3:1984	
Frequency range:	☐ 80 MHz - 1000 MHz ☑ 27 MHz - 500 MHz	
Modulation:	☐ FM ☐ 80% AM ☐ 900 MHz+/-5MHz	% with 1 kHz with PM 200Hz and 100% depth
Step size:	1 % step size	
Antenna polarization:	☑ vertical	☑ horizontal
Field strength:	☐ 1 V/m ☑ 3 V/m ☐ 10 V/m	test level 1 test level 2 test level 3
Test distance:	☐ 1 m ☑ 3 m	
Methods of test field calibration:	The test field is calibrated on empty test area before the test. The test is then performed with the same output power to the field generation antenna as during the calibration process.	
EUT position:	☑ front side ☑ right side ☑ left side ☑ rear side	
Environment:	Temperature: Humidity: Barometric pressure:	20 °C 73 % 990 hPa

7.1 Test Result

Radio Frequency Electromagnetic Field Immunity Test

The requirements according to the marked specifications on page 5 are

☑ **KEPT**

☐ **NOT KEPT**

Operating conditions during the test:

☑ Normal performance within the specification limits.

☐ Temporary degradation or loss of function or performance which is self recoverable.

☐ Temporary degradation or loss of function or performance which requires operator intervention or system reset.

☐ Degradation or loss of function which is not recoverable due to damage of equipment (components) or software, or loss of data.

Comment:

During the test the function of the EUT was observed by a video camera.

7.2 Test Setup

Radio Frequency Electromagnetic Field Immunity Test

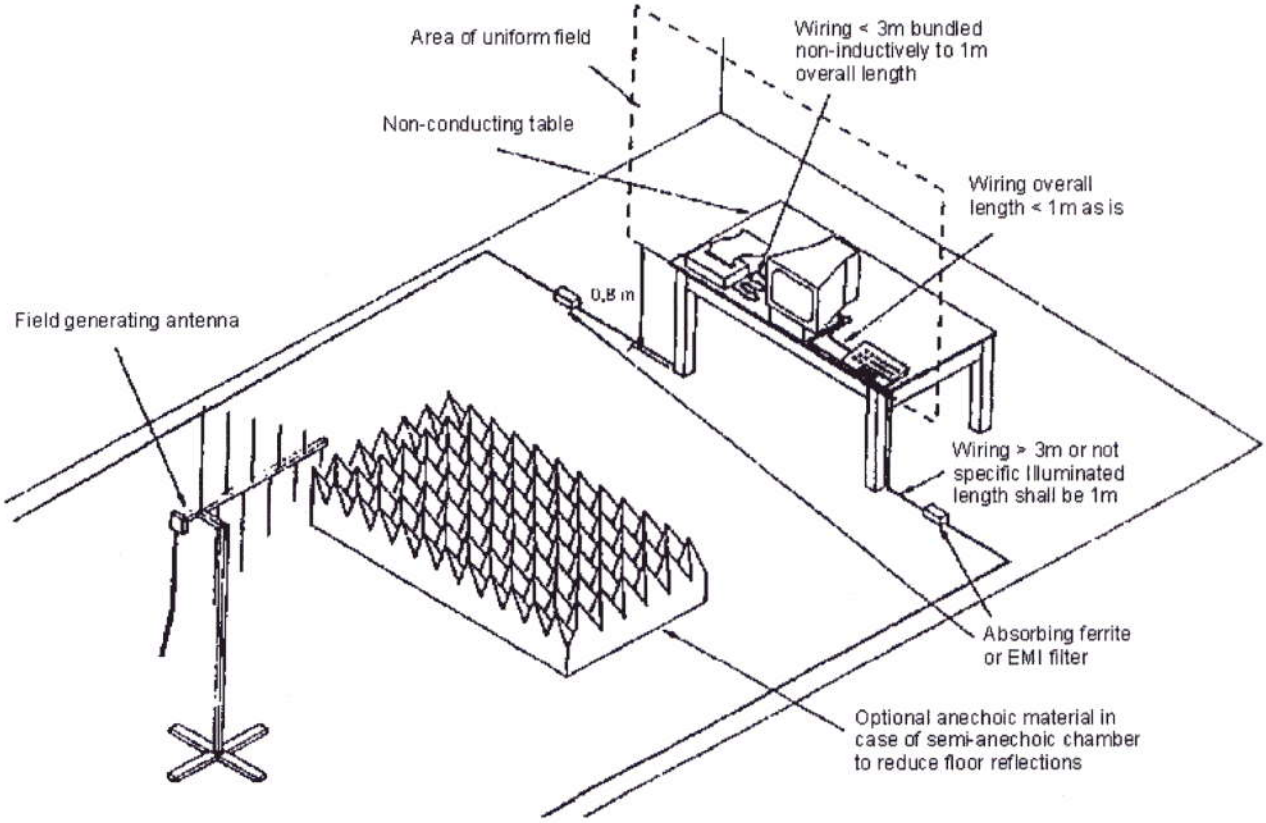

8.0 Test Conditions

EFT/BURST Immunity Test

The measurements of the fast transients (BURST) was carried out in

☐	Compact Diagnostic Chamber	Type:	Siemens - Matsushita
		Size:	7.300 x 3.400 x 3.300 (L x B x W)
		Inventory No.:	200017
☑	Shielded Room	Type:	Siemens - Matsushita
		Size:	4.600 x 2.800 x 2.550 (L x B x W)
		Inventory No.:	200018

MEASURING INSTRUMENTS:

☑	Tester 1000	EMC-Partner	Inventory No.:	100057
☐			Inventory No.:	

TEST ACCESSORIES:

☐	cap. coupling clamp	Schaffner	Inventory No.:	200011
☐			Inventory No.:	

All used test instruments as well as the test accessories are calibrated regularly.

Requirements:	Test Regulation IEC 801-4:1988 Electrical Fast Transients/Bursts Requirements Test Configuration according IEC 801-4:1988		
EFT/Burst Generator set up:	rise time single pulse:	5 ns ± 30%	
	impulse duration (50%):	50 ns ± 30%	
	Impulse repetition:	2.5 kHz	
	burst duration:	15 ms	
	burst period:	300 ms	
Test Voltage: (power supply)	☑ 0.5 kV	5.0 kHz	test level 1
	☑ 1 kV	5.0 kHz	test level 2
	☐ 2 kV	2.5 kHz	test level 3
	☐ 4 kV	2.5 kHz	test level 4
Polarity:	☑ positive	☑ negative	
Coupling Method:	☑ direct capacitive coupling (power cord) ☐ capacitive coupling clamp (control lines)		
Disturbance voltage:	☑ symmetrical ☑ unsymmetrical ☐ capacitive		
Test duration: (on test procedure)	☑ 1 minute		
Terminal points:	☑ power supply lines AC ☐ power supply lines DC ☐ control lines (multi-wire cable)		
Environment:	Temperature:	22 °C	
	Humidity:	38 %	
	Barometric pressure:	995 hPa	

8.1 Test Result

EFT/Burst Immunity Test

The requirements according to the marked specifications on page 5 are

☑ KEPT

☐ NOT KEPT

Operating conditions during the test:

☑ Normal performance within the specification limits.

☐ Temporary degradation or loss of function or performance which is self recoverable.

☐ Temporary degradation or loss of function or performance which requires operator intervention or system reset.

☐ Degradation or loss of function which is not recoverable due to damage of equipment (components) or software, or loss of data.

Comment:

During the test the EUT was observed.
The function of the EUT was not disturbed.

8.2 Test Setup

EFT/Burst Immunity Test

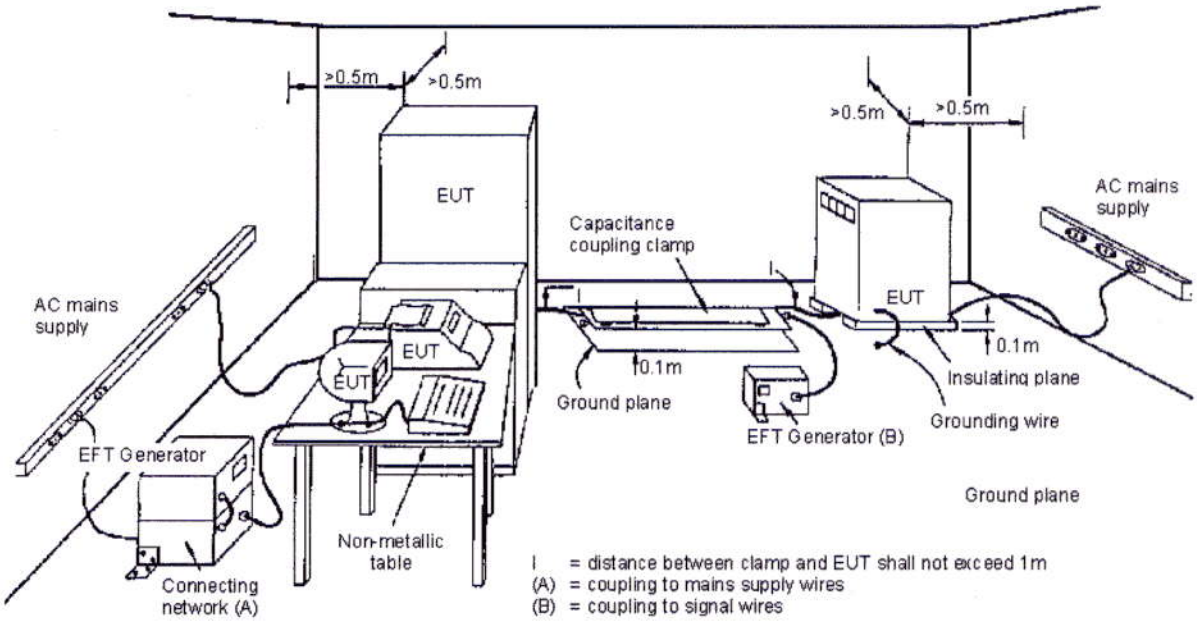

9.0 Summary

The EMC - Regulations according to the marked specifications listed on page 4 and 5 are

☑ **KEPT**

The EUT does fulfill the general approval requirements mentioned.

☐ **NOT KEPT**

The EUT does not fulfill the general approval requirements mentioned.

Date: March 20, 2000

Steven Wang

EMI/EMC Test Engineer

EMV Testhaus GmbH
Coordinators